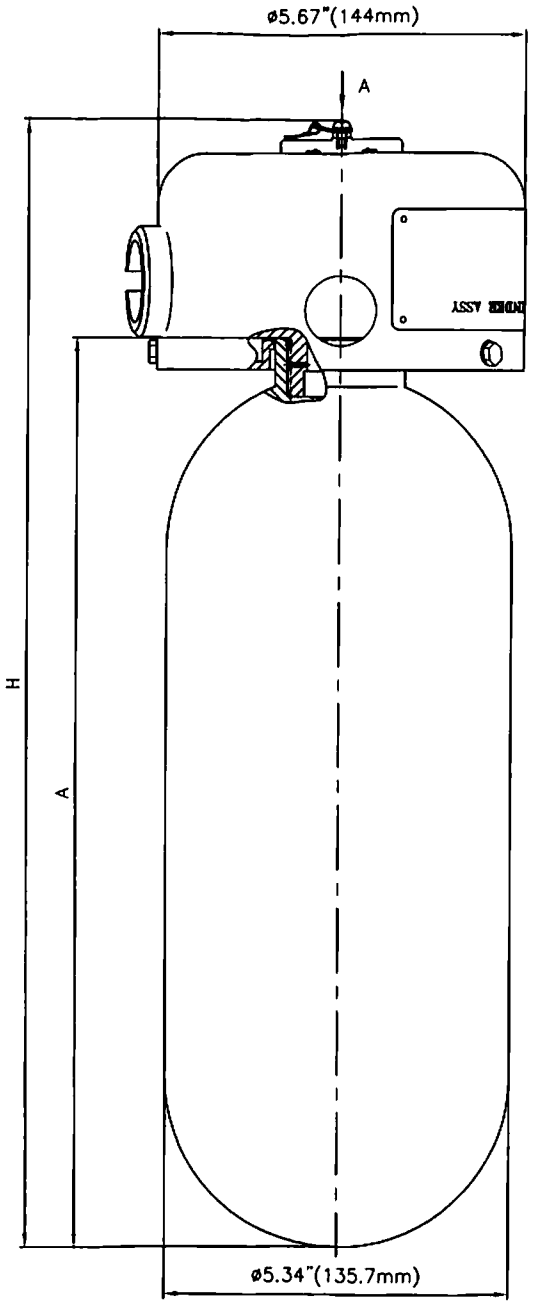

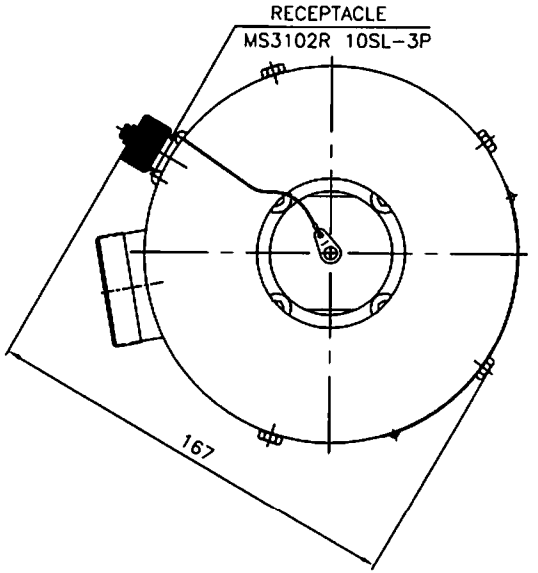

CYLINDER ASSY PART NO.	A	H	CHARGE WEIGHT HFC-227ea
764318-1	14"(356mm)	17"(443mm)	3Kg
764318-2	18"(458mm)	21.46"(545mm)	4.5Kg

SYM.	DESCRIPTION	DATE	APPROVAL	FROM	DWG	PART NO.	DWG NO.	DESCRIPTION
REVISIONS						PARTS LIST		

TOLERANCES: .XX / .XXX / .XXXX / ANGLES / MATERIAL

SCALE 1:1
DRAWN VIDA 24.05.07
CHECKED NEIA 24.05.07
SUBMITTED
APPROVED

764660
NEXT ASSY

DIMENSIONS ARE IN MM
SURFACE TEXTURE AS PER ANSI-B46.1

SPECTREX INC.

CYLINDER ASSY

SIZE D | DWG. NO. 0L-764318 | SHEET 1 OF 1